2/2 WAY DIRECT ACTING SOLENOID VALVE, ZG3/8"-ZG2"

2W160-15S

2W200-20

2W250-25

2W400-40

2W500-50

Feature

Protection Degree is IP67, these valves can be supplied with manual operation.

2W250-25A

2W160-15NO

2W160-15Z

2W160-15H

Ordering Code

2W - 160 - 15 - A - E - AC110V

2W — Specification Code
2W: 2/2 Way Solenoid Valve

160 — Orifice Size
160: 16mm **350:** 35mm
160: 16mm **400:** 40mm
200: 20mm **500:** 50mm
250: 25mm

15 — Port Size
10: ZG3/8"
15: ZG1/2"
20: ZG3/4"
25: ZG1"
35: ZG1 1/4"
40: ZG1 1/2"
50: ZG2"

A —
A: Waterproof Coil
Blank: Round Coil
S: Square Coil IP65
H: Mamual
NO: Normally Open
NC: Normally Close
Z: Ex-proof
L: Latching
SW: IP65 Wiring Coil AB410B
ES: Energy Saving Coil

E — Sealing Material
Blank: NBR
E: EPDM
V: VITON
SI: SI

AC110V — Standard Voltage
DC12V
DC24V
AC24V 50Hz/60Hz
AC110V 50Hz/60Hz
AC220V 50Hz/60Hz
AC380V 50Hz/60Hz

Specification

Model	2W160-10	2W160-15	2W200-20	2W250-25	2W350-35	2W400-40	2W500-50
Working Medium	Air, Water, Oil, Gas						
Operation	Direct Acting						
Acting Type	Normally Closed						
Orifice Size (mm)	16		20	25	35	40	50
CV Value	4.8		4.8	12	24	29	48
Port Size	ZG3/8"	ZG1/2"	ZG3/4"	ZG1"	ZG1 1/4"	ZG1 1/2"	ZG2"
Operation Fluid Viscosity	20 CST Below						
Pressure Difference	Air: 0~1.0MPa; Water: 0~0.7MPa; Oil: 0~0.9MPa; Normally open: 0~0.8MPa						
Operating Temperature	NBR：-5~80℃； EPDM：-5~120℃； VITON：-10~150℃； SI：-15~150℃（orifice less than 25mm）						
Voltage Range	± 10%						
Material of Body	Brass						

2/2 WAY DIRECT ACTING SOLENOID VALVE, ZG3/8"-ZG2"

Feactures of Latching Solenoid Valve

1. Engery savings.
2. Low actived power.

Working Principle of Latching Solenoid Valve

A permanent magnet that requires no electric input is built into the top of the valve. The small magnet's field is not enough to activate the plunger. when the valve is switched opened with full power, the permanent magnet is strong enough to keep the valve open. This allows the valve to remain open after the initial electrical power has been turned off, thus offering significant potential energy savings. The valve will remain open until another electrical charge, of opposite polarity, is applied.

Flow Chart

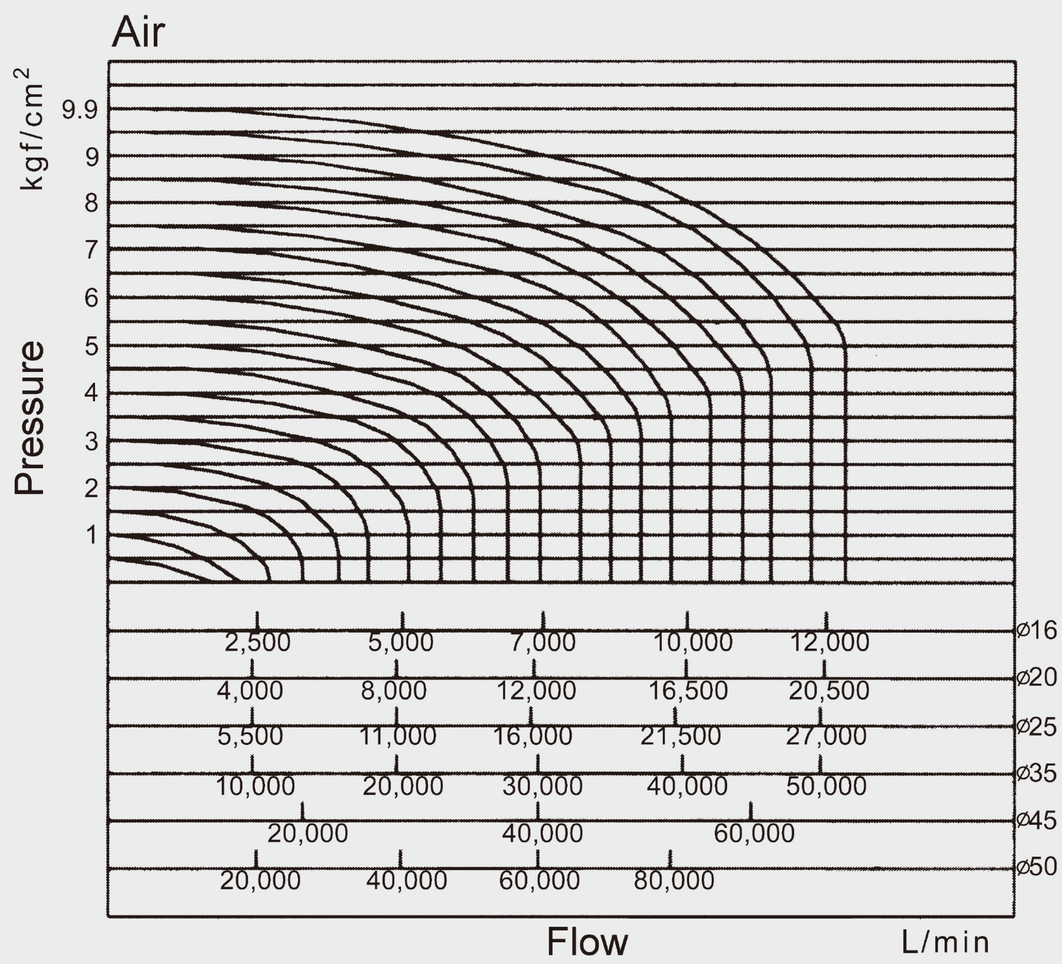

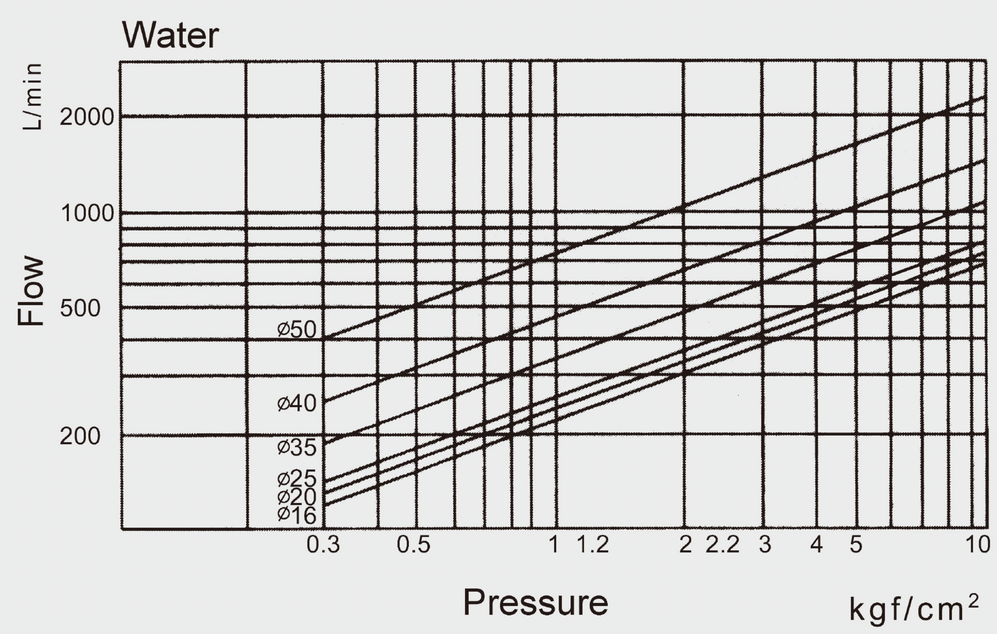

Overall Dimension

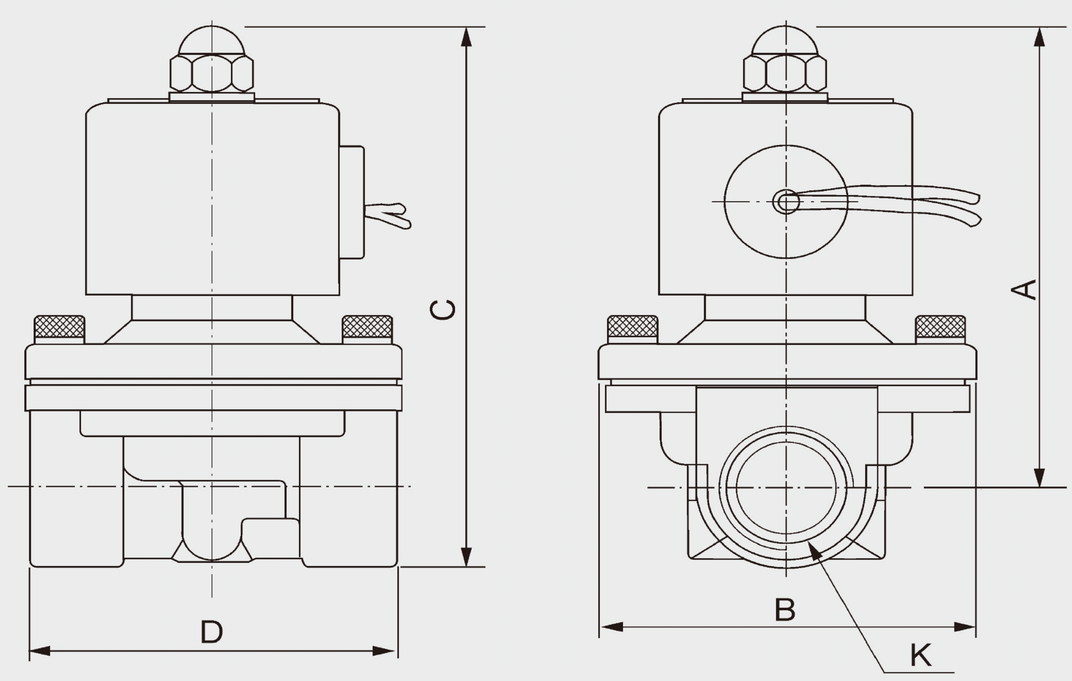

Dimension Sheet

Model	A	B	C	D	K
2W160-10	90	56	103	66	ZG3/8"
2W160-10-NO	112		125		
2W160-15	90	56	103	66	ZG1/2"
2W160-15-NO	112		125		
2W200-20	94	56	110	73	ZG3/4"
2W200-20-NO	116		132		
2W250-25	98	73	117	98	ZG1"
2W250-25-NO	120		139		
2W350-35	135	93	160	118	ZG1¹/4"
2W350-35-NO	155		180		
2W400-40	135	93	160	118	ZG1¹/2"
2W400-40-NO	155		180		
2W500-50	153	124	188	156	ZG2"
2W500-50-NO	174		209		